UNITED ENGINEERING SOLUTIONS	RENTAL EQUIPMENT	
	Item	800mt Boat Gear
	Date	08.2017
	Revision	0

800mt BOAT GEAR

PROPERTIES

- Specifically developed for lifting of ships and boats
- Two sets, each SWL 200mt in single configuration, 400mt in coupled configuration, SWL 800mt total for both sets together
- includes 8 slings SWL 50mt, 30m long
- Weight abt. 4.2mt per set

MAXIMUM LOADS

200mt single configuration	400mt coupled configuration

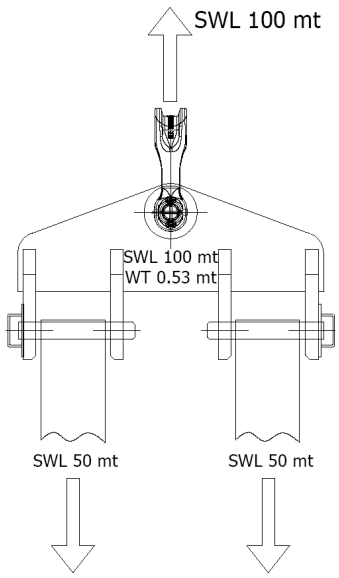

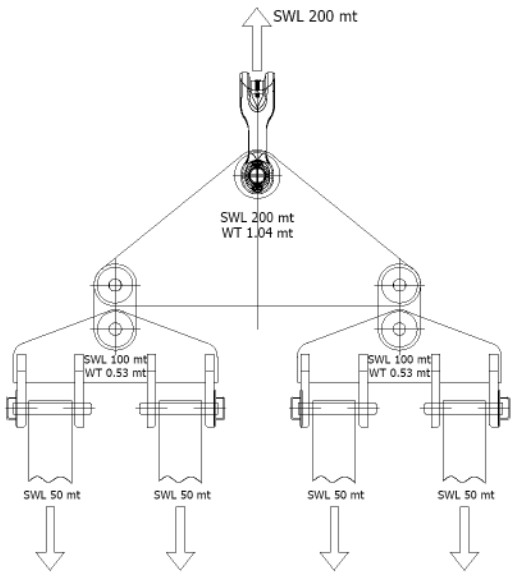

Note: Load cases different from the ones shown may be arranged. Please feel free to contact us for your customized engineering solution.

ENQUIRY

For questions and enquiries, please contact
enquiry@united.engineering